EK Leaf Chain

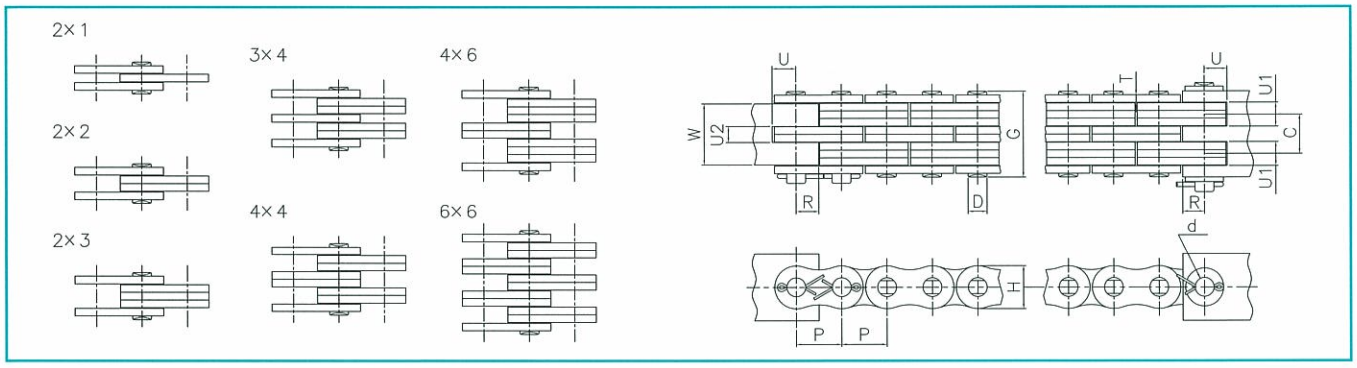

〔mm〕

EK Chain No.	Pitch P	Link Plate	Link Plate Height max.H	Link Plate Thickness T	Pin Dia. D	Pin Over All Riveted G	Minimum Tensile Strength kN	Minimum Tensile Strength kgf	Fating Strength kN	Fating Strength kgf	Approx. Weight kg/m	Clevis d (Hole Dia.) (min)	Clevis R (max)	Clevis U (min)	Clevis C	Clevis U1 (min)	Clevis W (max)	Clevis U2 (min)
EK BL- 421		2 × 1				8.40	11.7	1,200	1.5	160	0.44				-	2.2	2.0	-
EK BL- 422		2 × 2				10.80	23.5	2,400	3.1	320	0.58				-	4.3	4.1	-
EK BL- 423		2 × 3				12.95	23.5	2,400	4.4	450	0.72				-	6.4	6.2	-
EK BL- 434	12.700	3 × 4	12.0	2.0	5.06	17.30	37.2	3,800	5.0	510	0.99	5.12	6.3	6.3	6.2	4.3	10.5	2.2
EK BL- 444		4 × 4				18.90	49.0	5,000	5.2	540	1.13				8.2	4.3	12.1	4.3
EK BL- 446		4 × 6				23.60	49.0	5,000	5.8	600	1.41				10.3	6.4	16.8	4.3
EK BL- 466		6 × 6				27.40	73.5	7,500	6.1	630	1.68				8.2	4.3	20.5	4.3
EK BL- 521		2 × 1				10.00	19.6	2,000	2.6	270	0.70				-	2.7	2.4	-
EK BL- 522		2 × 2				12.90	39.2	4,000	5.1	530	0.92				-	5.1	4.9	-
EK BL- 523		2 × 3				15.20	39.2	4,000	7.4	760	1.15				-	7.6	7.4	-
EK BL- 534	15.875	3 × 4	15.0	2.4	5.92	20.10	58.8	6,000	8.5	870	1.58	6.00	7.9	7.9	7.4	5.1	12.2	2.7
EK BL- 544		4 × 4				22.65	78.4	8,000	9.0	920	1.81				9.8	5.1	14.7	5.1
EK BL- 546		4 × 6				27.50	78.4	8,000	9.9	1010	2.25				12.3	7.6	19.6	5.1
EK BL- 566		6 × 6				32.50	117.6	12,000	10.3	1060	2.69				9.8	5.1	24.6	5.1
EK BL- 622		2 × 2				16.40	68.6	7,000	7.6	780	1.39				-	6.8	6.5	-
EK BL- 623		2 × 3				19.90	68.6	7,000	10.8	1110	1.72				-	10.2	9.8	-
EK BL- 634	19.050	3 × 4	18.1	3.2	7.93	26.40	102.9	10,500	12.4	1270	2.38	8.00	9.5	9.5	9.9	6.8	16.5	3.5
EK BL- 644		4 × 4				29.60	137.2	14,000	13.2	1350	2.70				13.2	6.8	19.7	6.8
EK BL- 646		4 × 6				36.50	137.2	14,000	14.4	1470	3.36				18.5	10.2	26.6	6.8
EK BL- 666		6 × 6				42.80	205.9	21,000	15.2	1550	4.01				13.2	6.8	32.9	6.8
EK BL- 822		2 × 2				20.50	102.9	10,500	13.2	1350	2.30				-	8.5	8.1	-
EK BL- 823		2 × 3				24.60	102.9	10,500	19.8	2020	2.84				-	12.7	12.2	-
EK BL- 834	25.400	3 × 4	24.1	4.0	9.53	32.70	154.9	15,800	22.5	2300	3.94	9.60	12.7	12.7	12.3	8.5	20.4	4.5
EK BL- 844		4 × 4				36.80	205.9	21,000	23.9	2440	4.49				16.4	8.5	24.5	8.5
EK BL- 846		4 × 6				44.90	205.9	21,000	26.2	2680	5.58				20.5	12.7	32.6	8.5
EK BL- 866		6 × 6				53.30	308.9	31,500	27.5	2810	6.68				16.4	8.5	41.0	8.5
EK BL-1022		2 × 2				24.40	151.0	15,400	20.3	2080	3.45				-	10.1	9.7	-
EK BL-1023		2 × 3				29.30	151.0	15,400	32.1	3280	4.29				-	15.1	14.6	-
EK BL-1034	31.750	3 × 4	30.0	4.8	11.10	39.20	225.5	23,000	36.6	3740	5.97	11.15	15.8	15.8	14.6	10.1	24.5	5.5
EK BL-1044		4 × 4				43.90	282.4	28,800	38.9	3970	6.80				19.4	10.1	29.2	10.1
EK BL-1046		4 × 6				53.60	282.4	28,800	42.6	4350	8.47				24.3	15.1	38.9	10.1
EK BL-1066		6 × 6				63.30	421.6	43,000	44.8	4570	10.14				19.4	10.1	48.5	10.1
EK BL-1223		2 × 3				33.50	196.1	20,000	49.6	5060	5.53				-	17.5	17.0	-
EK BL-1234		3 × 4				45.10	313.8	32,000	56.5	5770	7.69				17.2	11.9	28.6	6.0
EK BL-1244	38.10	4 × 4	36.2	5.6	12.70	51.50	392.2	40,000	60.6	6120	8.79	12.75	19.0	19.0	22.9	11.9	34.8	11.9
EK BL-1246		4 × 6				62.20	392.2	40,000	65.7	6700	10.93				28.7	17.5	45.7	11.9
EK BL-1266		6 × 6				73.00	588.3	60,000	69.1	7050	13.11				22.9	11.9	57.3	11.9
EK BL-1423		2 × 3				38.50	235.3	24,000	65.3	6660	8.15				-	20.1	19.4	-
EK BL-1434		3 × 4				52.00	387.3	39,500	71.5	7300	11.34				19.5	13.5	32.9	7.0
EK BL-1444	44.450	4 × 4	42.2	6.4	14.28	58.50	470.7	48,000	74.5	7600	12.93	14.35	22.2	22.2	26.0	13.5	39.4	13.5
EK BL-1446		4 × 6				71.00	470.7	48,000	86.4	8820	16.09				32.6	20.1	51.9	13.5
EK BL-1466		6 × 6				84.40	706.0	72,000	90.9	9270	19.28				26.0	13.5	65.1	13.5
EK BL-1623		2 × 3				44.50	357.9	36,500	77.2	7880	10.51				-	22.8	21.9	-
EK BL-1634		3 × 4				59.50	559.9	57,100	85.3	8700	14.61				22.3	15.5	36.9	8.0
EK BL-1644	50.800	4 × 4	48.2	7.2	17.45	67.00	715.8	73,000	91.2	9300	16.65	17.55	25.4	25.4	29.8	15.5	43.9	15.5
EK BL-1646		4 × 6				82.00	715.8	73,000	107.8	11000	20.76				37.2	22.8	59.4	15.5
EK BL-1666		6 × 6				97.00	1,073.8	109,500	113.7	11600	24.86				29.8	15.5	74.4	15.5

NOTE:

1) Minimum ultimate tensile strength is not the working load capacity of the chain. The safety factor must be applied, with regard to severity or application and experience of user designing an application.

(mm)

EK Chain No.	Pitch P	Link Plate	Link Plate Height max.H	Link Plate Thickness T	Pin Dia. D	Pin Over All Riveted G	Minimum Tensile Strength kN	Minimum Tensile Strength kgf	Fating Strength kN	Fating Strength kgf	Approx. Weight kg/m	Clevis d (Hole Dia.) (min)	Clevis R (max)	Clevis U (min)	Clevis C	Clevis U1 (min)	Clevis W (max)	Clevis U2 (min)
EK AL- 322	9.525	2 × 2	7.5	1.27	3.58	6.80	7.8	800	0.8	85	0.22	3.63	4.7	4.2	-	2.7	2.7	-
EK AL- 422		2 × 2				8.30	16.6	1,700	1.8	190	0.36						3.0	
EK AL- 444	12.700	4 × 4	10.4	1.50	3.94	14.70	33.3	3,400	3.5	360	0.72	4.00	6.3	6.0	6.3	3.2	9.4	3.2
EK AL- 466		6 × 6				20.80	50.0	5,100	4.1	420	1.07						15.9	
EK AL- 522		2 × 2				10.80	27.4	2,800	3.0	310	0.62						4.0	
EK AL- 544	15.875	4 × 4	13.0	2.00	5.06	18.90	54.9	5,600	6.3	650	1.23	5.12	7.9	7.5	8.3	4.3	12.5	4.3
EK AL- 566		6 × 6				27.40	82.3	8,400	6.7	690	1.83						20.9	
EK AL- 622		2 × 2				12.90	38.2	3,900	4.3	440	0.87						4.8	
EK AL- 644	19.050	4 × 4	15.6	2.40	5.92	22.65	76.4	7,800	8.2	840	1.71	6.00	9.5	8.5	9.9	5.1	14.7	5.1
EK AL- 666		6 × 6				32.50	114.7	11,700	9.5	970	2.55						24.6	
EK AL- 822		2 × 2				16.40	64.7	6,600	7.9	810	1.54						6.4	
EK AL- 844	25.400	4 × 4	20.8	3.20	7.90	29.60	132.5	13,520	14.7	1,500	3.03	8.00	12.7	11.5	13.0	6.8	19.8	6.8
EK AL- 866		6 × 6				42.80	194.1	19,800	17.5	1,790	4.51						33.0	
EK AL-1022		2 × 2				20.50	98.0	10,000	12.9	1,320	2.51						8.0	
EK AL-1044	31.750	4 × 4	26.0	4.00	9.50	36.80	196.1	20,000	24.8	2,530	4.94	9.60	15.8	14.5	16.2	8.5	24.4	8.5
EK AL-1066		6 × 6				53.30	294.1	30,000	28.6	2,920	7.36						41.0	
EK AL-1222		2 × 2				24.40	138.2	14,100	18.7	1,910	3.48						9.6	
EK AL-1244	38.100	4 × 4	31.0	4.80	11.07	43.90	247.1	25,200	35.9	3,670	6.87	11.15	19.0	17.5	19.4	10.1	29.2	10.1
EK AL-1266		6 × 6				63.30	414.8	42,300	41.3	4,220	10.24						49.0	
EK AL-1422		2 × 2				27.90	178.4	18,200	22.5	2,300	4.38						11.2	
EK AL-1444	44.450	4 × 4	36.0	5.60	12.67	51.50	356.9	36,400	43.3	4,420	8.64	12.75	22.2	20.0	22.6	11.9	34.4	11.9
EK AL-1466		6 × 6				73.50	535.4	54,600	49.8	5,080	12.88						57.5	
EK AL-1622		2 × 2				32.00	230.4	23,500	30.2	3,080	5.75						12.8	
EK AL-1644	50.800	4 × 4	41.0	6.40	14.25	58.10	460.9	47,000	57.9	5,910	11.33	14.35	25.4	22.5	26.2	13.5	39.0	13.5
EK AL-1666		6 × 6				84.40	691.3	70,500	66.7	6,810	16.92						65.4	

EK Cam, Starter, Race Kart Chains

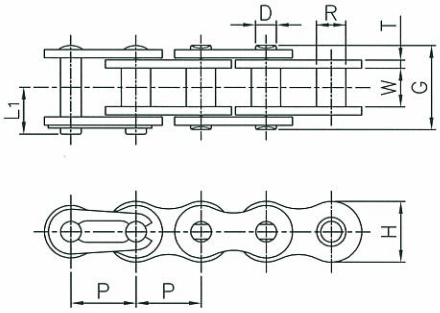

Bushing Chain

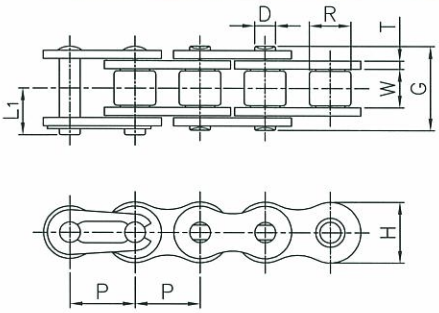

Roller Chain

(mm)

EK Chain No.	Pitch P	Roller Dia. R	Roller Link Width W(min.)	Pin Dia. D	Pin Length L1	Pin Length G	Link Plate Thickness T	Link Plate Height H(max.)	Average Tensile Strength kN	Application	Approx. Weight Kg/Meter
EK 25	6.350	3.300	3.10	2.30	4.70	7.60	0.75	6.00	4.40	Cam	0.13
EK 25H	6.350	3.300	3.10	2.30	5.20	8.60	1.00	6.00	5.50	Cam	0.16
EK 29H	7.774	4.585	4.60	3.16	7.15	11.90	1.40	7.50	9.80	Cam, Starter	0.32
EK 06B	9.525	*6.350	5.72	3.25	7.45	12.30	1.30	8.10	10.30	Cam	0.39
EK 06B-2	9.525	*6.350	5.72	3.25	7.45	23.00	1.30	8.10	21.10	Cam	0.77
EK 06BE	9.525	*6.350	5.72	3.25	-	13.60	1.35	8.30	12.40	Cam	0.45
EK 05E	8.000	5.650	4.60	3.16	-	11.70	1.30	7.80	10.30	Cam	0.36
EK 05T-D	8.000	*4.700	4.60	3.16	-	11.50	1.30	7.80	8.50	Cam	0.42
EK 05T-M	8.000	*4.700	4.60	3.16	-	11.50	1.30	7.80	8.20	Oil Pump	0.42
EK 29HR	7.774	4.585	4.60	3.16	-	12.40	1.40	7.50	9.80	Race Kart	0.30
EK 29HRD	7.774	4.585	4.60	3.16	-	12.40	1.40	7.50	9.80	Race Kart	0.33
EK 35R	9.525	5.080	4.68	3.58	7.80	13.60	1.27	9.00	11.70	Race Kart	0.36

NOTE:

1) * denotes bushing chain. Dimension shown is bushing diameter.
2) Chain with suffix code "R" has longer bushing and therefore the standard connecting link can not be used.
3) EK06BE is furnished with solid bushing and chromed pin.
4) EK05T-D is furnished with solid bushing.